G6 Megaswitch

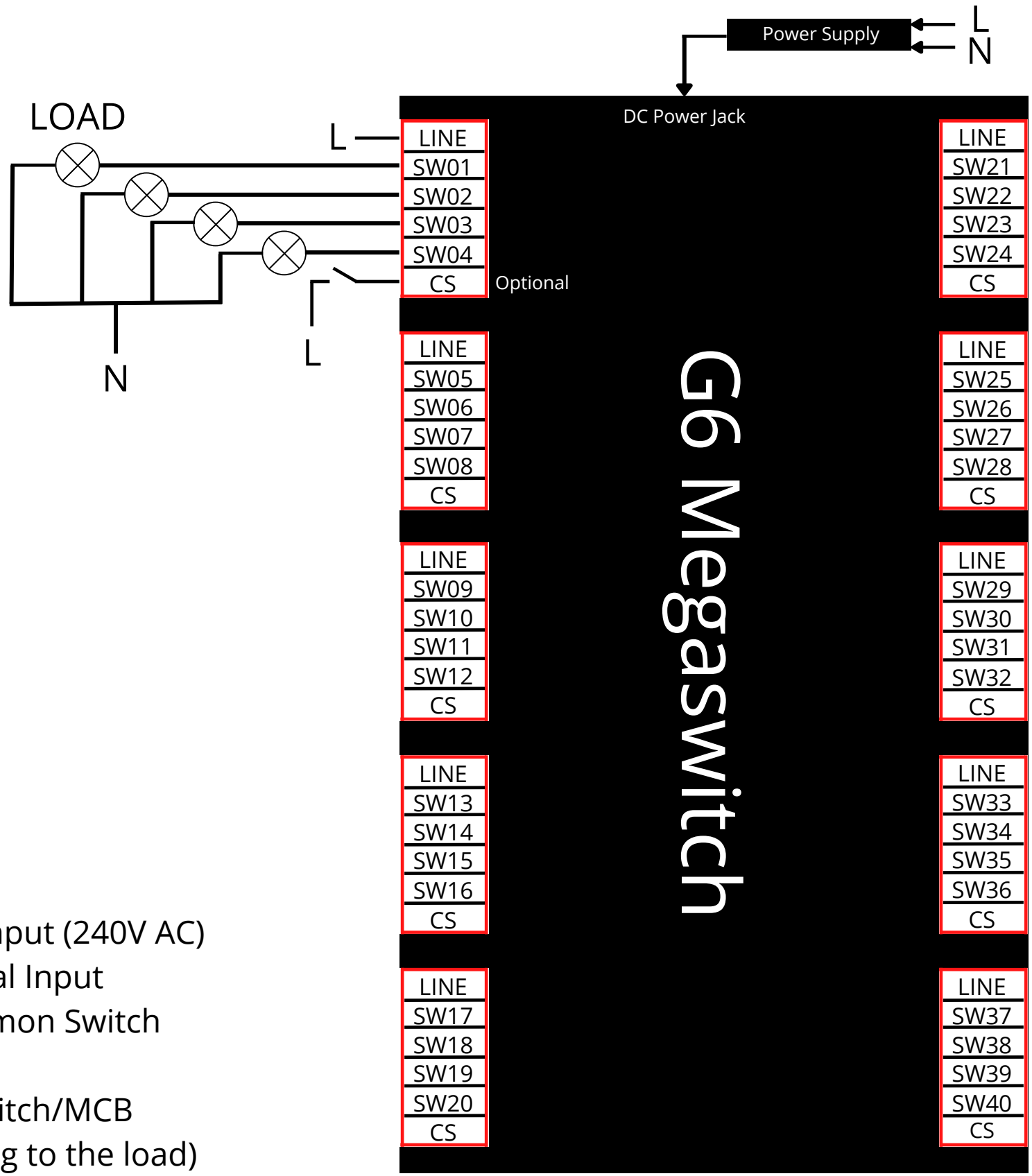

LEGEND:
L : Line Input (240V AC)
N: Neutral Input
CS: Common Switch
⊗: Load
—╱—: Switch/MCB
(according to the load)